DRAWBAR SQUARE K4 WITH PARKING BRAKE

ETI- No. 811577 (Specify the order with the ETI No.)

Spare Parts

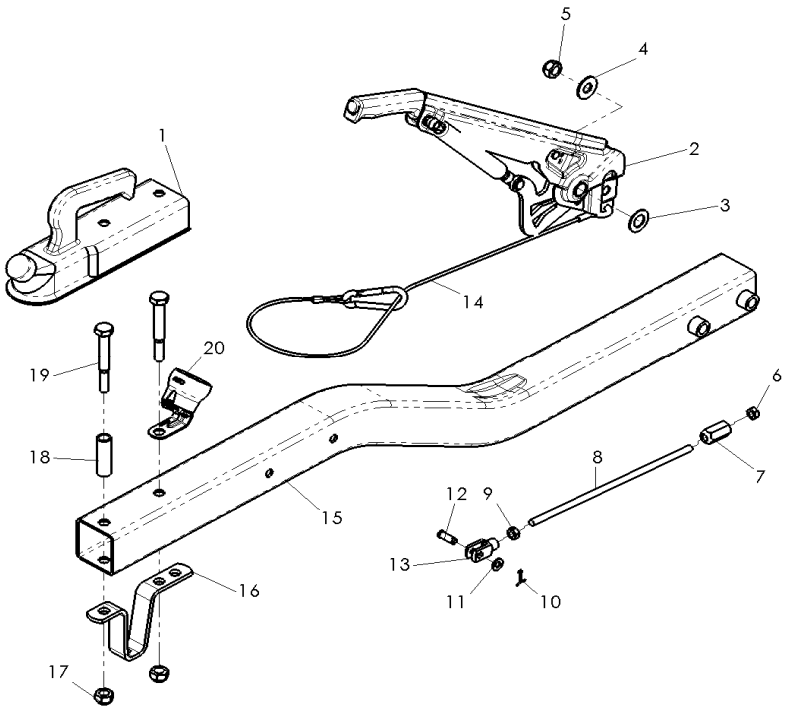

Item	Description	Drawing No.
1	COUPLING AK7 (PURCHASE ORDER BY TYPE WITHOUT FIXING MATERIAL)	
2	HAND BRAKE LEVER CPL. WITH BRAKE AWAY CABLE	243737
3	WASHER A17 DIN 125-ST A3C	700625
4	WASHER A13 9021-ST A3C	702798
5	NUT HEX M12 985-10 A3C	702750
6	SPHERIC NUT M8 A3C	365137
7	NUT HEX M8 A3C	700108
8	CONNECTION ROD M8	AT THE TIME OF ORDER INDICATE LENGTH
9	NUT HEX M8 934-8 A3C	700108
10	SPLINT 2x25 DIN 945 A3C	700554
11	WASHER A8,4 DIN 125-ST A3C	700138
12	BOLT	2076810609
13	FORK HEAD 8x32	700852
14	BRAKE AWAY CABLE	209534
15	DRAWBAR CROSS-SECTION	AT THE TIME OF ORDER SEE GRAVE AT THE NAMEPLATE
16	BEARING BINDER NOT BENDED	203037
17	NUT HEX M12 DIN 985-10 A3C	702750
18	BUSH	551474
19	BOLT HEX M12x90 DIN 931-8.8 A3C	702823
20	CONNECTOR BRACKET	1222023

Item	Description	Drawing No.

provided	ETI-No.	changed	Change No.	Reason of the change	Revisons-No.
14.01.10	811577_en		FREIGABE		A