OVERRUN DEVICE TYPE PROFI V 3000

ETI- No. 811520 (Specify the order with the ETI No.)

AL-KO Spare Parts

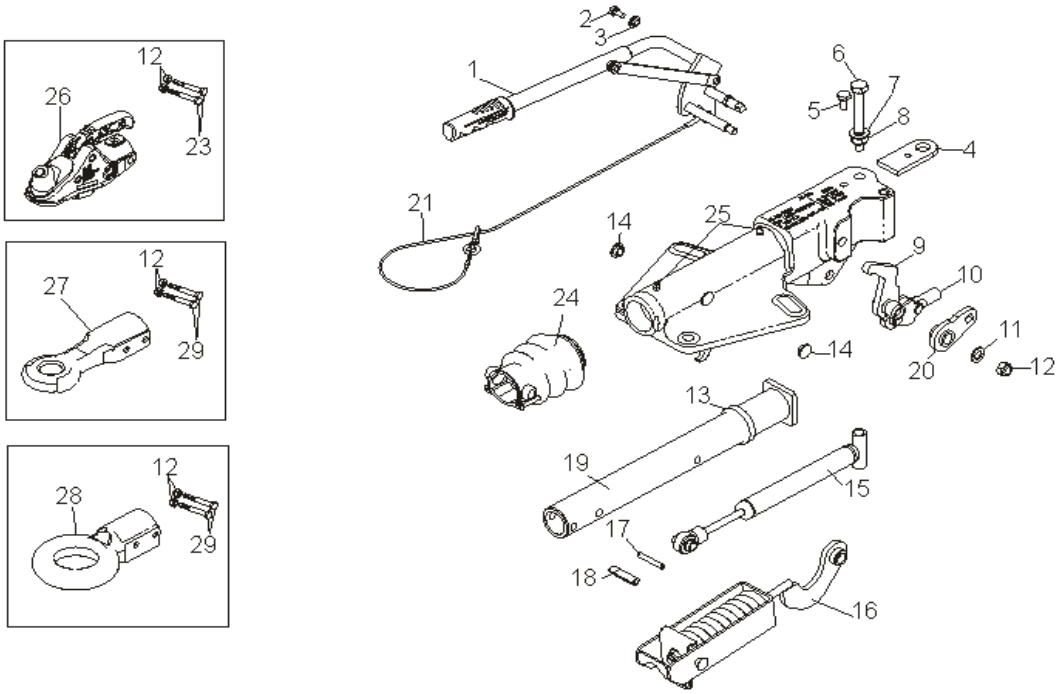

Item	Description	Drawing No.
1	HAND BRAKE LEVER WITH BRAKE AWAY CABLE	692236
2	BOLT HEX M8x16 DIN 933-8.8	703570
3	BUSH	692645
4	END STOP PLATE	392258
5	BOLT HEX M10x20 DIN 933-8.8	703571
6	BOLT HEX M14x110 DIN 931-8.8	701992
7	WASHER A15 DIN 125	703435
8	NUT HEX M14 DIN 985-10	701568
9	BELL CRANK CPL.	
	90:27	692237
	90:30	692711
	90:33,5	692712
10	GREASE NIPPLE AS 6x1 CONUS 71412	700203
11	WASHER A13 DIN 125	700140
12	NUT HEX M12 DIN 980	704065
13	DAMPING RUBBER	371372
14	STOPPER	372416
15	SHOCK ABSORBER	1217089
16	SPRING BAND CPL.	692648
17	SPRING DOWEL PIN 7x48	704407
18	SPRING DOWEL PIN 12x48	704408
19	DRAW TUBE	692281
20	LEVER WERLDED	692687
21	BRAKE AWAY CABLE	209385
22	NOT APPLICABLE	
23	NOLT HEX M 12x85 DIN 931-8.8	703551

Item	Description	Drawing No.
24	BELLOWS	366356
25	GREASE NIPPLE AS 8x1 CONUS 71412	2171710001
26	COUPLING AK 301	1221746
27	DRAWBAR EYE - DIN	1213350
28	DRAWBAR EYE - NATO	1224111
29	BOTL HEX M12x90 DIN 931 A3C	703341

provided	ETI-No.	changed	Change No.	Reason of the change	Revisons-No.
15.10.07	811520_en	31.08.2009	15701	POS 27, 28, 29 NEW	B
15.10.07	811520_en	19.01.2010	15885	POS 27 AND POS 28 MODIFIED	C
15.10.07	811520_en	27.04.2010	15983	POS 22 BOLT 691590 NOT APPLICABLE	D