AL-KO SECURE

ETI- No. 811496 (Specify the order with the ETI No.)

Spare Parts

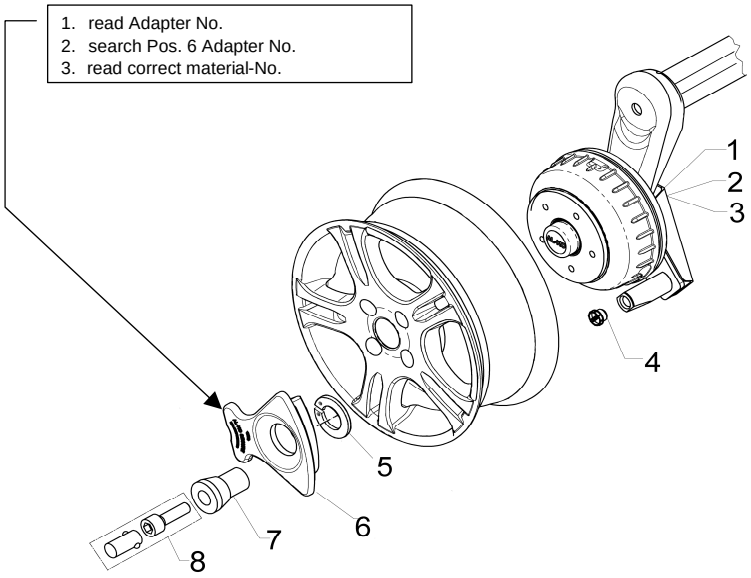

Item	Description	Drawing No.
1	RECEIVER LEFT 2051 - 14" PLUS	1338879
1	RECEIVER LEFT 2051 - 15" PLUS	1338881
1	RECEIVER LEFT 2361 - 15" PLUS	1338883
1	RECEIVER LEFT 2051 - 14" COMPACT	1360725
1	RECEIVER LEFT 2051 - 15" COMPACT	1360727
1	RECEIVER RIGHT 2051 - 14" PLUS	1338880
1	RECEIVER RIGHT 2051 - 15" PLUS	1338882
1	RECEIVER RIGHT 2361 - 15" PLUS	1338884
2	BOLT CYLINDER M12X14 (3 PIECES)	705148
3	SPRING RING B12 DIN127 (3 PIECES)	702000
4	BOLTED STOPPER M20	691885
5	LOCKING RING 36X1,75 DIN471	1389007
6	ADAPTER NO. 1	1388886
6	ADAPTER NO. 2	1388887
6	ADAPTER NO. 3	1388998
6	ADAPTER NO. 4	1388891
6	ADAPTER NO. 5	1388888
6	ADAPTER NO. 6	1389021
6	ADAPTER NO. 7	1389019
6	ADAPTER NO. 8	1389125
6	ADAPTER NO. 9	1388999
6	ADAPTER NO. 10	1389124
6	ADAPTER NO. 11	1389126
6	ADAPTER NO. 12	1389413
6	ADAPTER NO. 13	1389414

Item	Description	Drawing No.
7	LOCKING BOLT 80MM	1388783
7	LOCKING BOLT 90MM	1388778
8	SECURITY BOLT WITH TOOL	*
8	LOCK CPL WITH KEY	*

*** = Card Registration System**

provided	ETI-No.	changed	Change No.	Reason of the change	Revisons-No.
12.12.05	811496_en	13.07.2009	FREIGABE		A